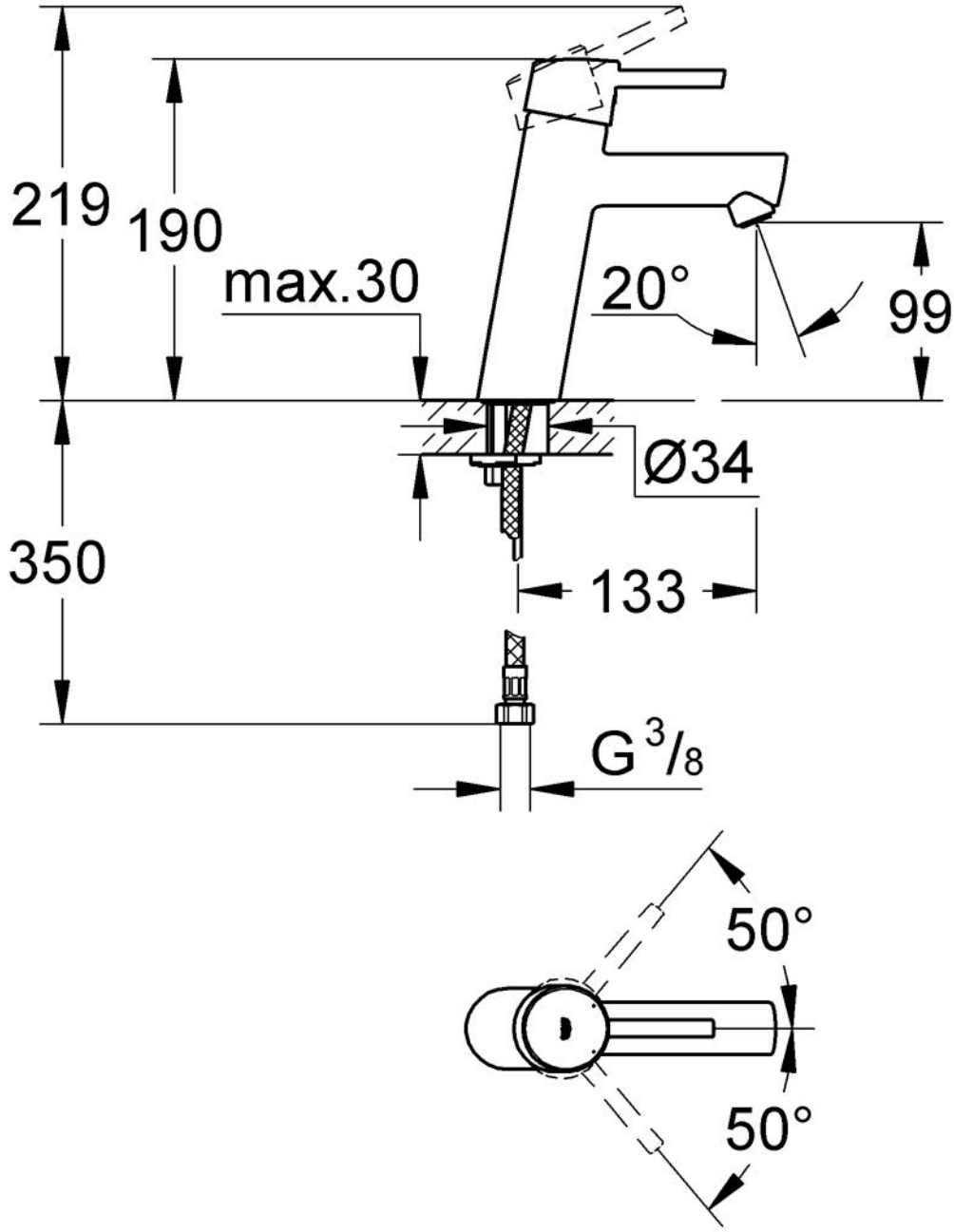
219
190
max.30
20°
99
Ø34
350
133
G 3/8
50°
50°