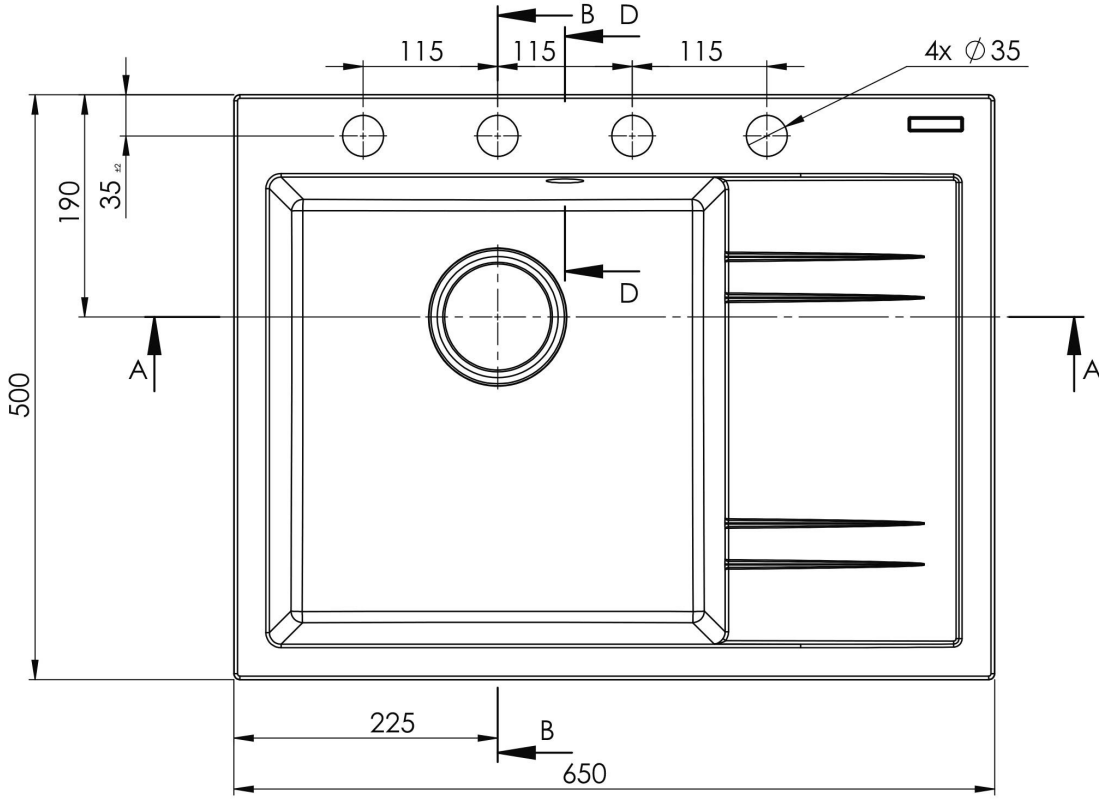
B D
115
115
115
4x ∅35
190
35 ±2
D
A
A
500
225
B
650

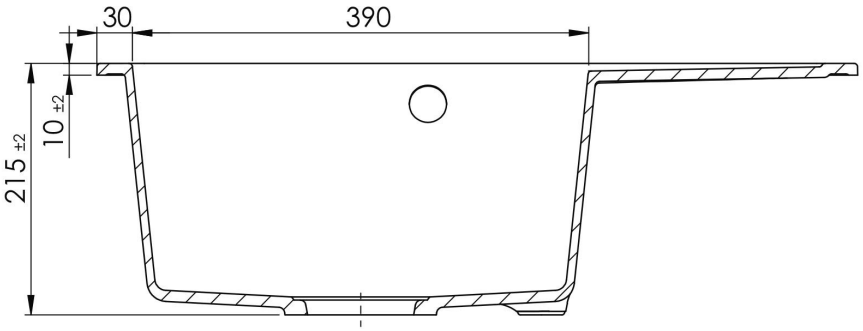
30
390
10 ±2
215 ±2

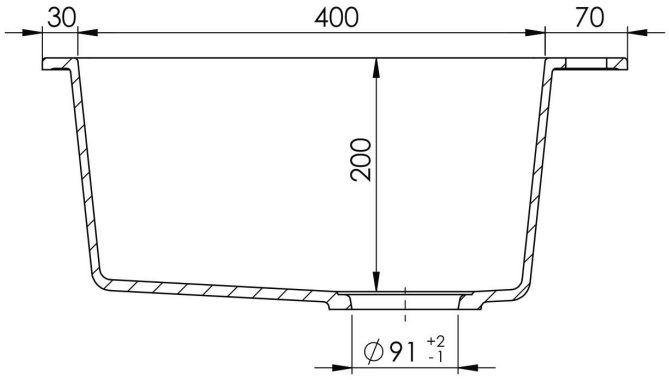
30
400
70
200
∅91 +2 -1

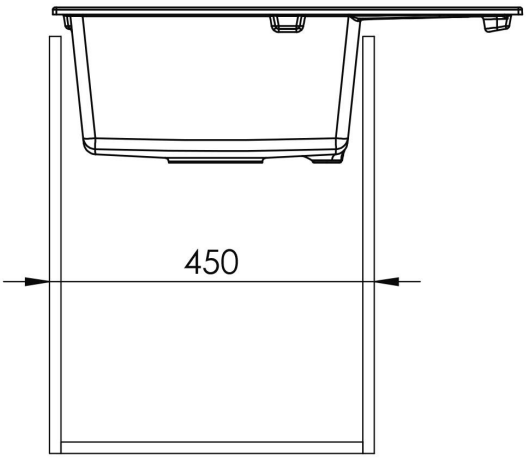
450

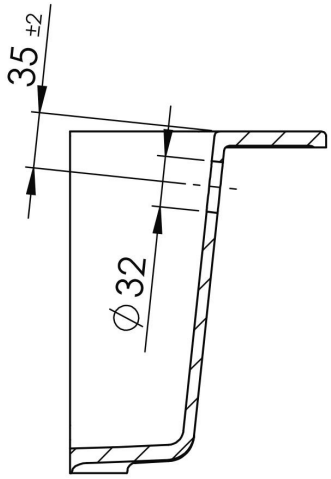
35 ±2
∅32